FREENOVE ESP32 WROVER CAM Pinout
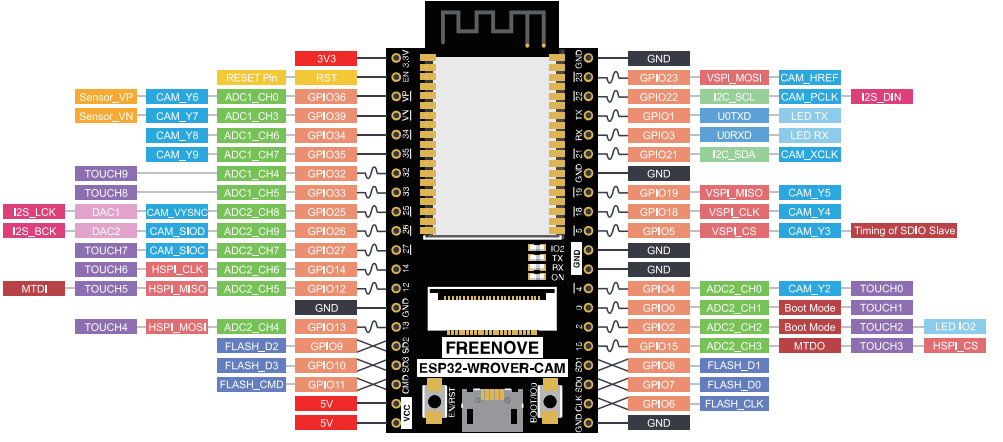
PWD	Power Rails (3V3 and 5V)
GND	Ground
Serial	Serial for Debugging/Programming
ADCX_CH	Analog-to-Digital Converter
RESET	Reset the chip
GPIOX	GPIO Input and Output
TOUCHX	Touch Sensor Input Channel
HALL	Hall Sensor Pin
PWM	PWM Capable Pin
LED	On-board LED Pin
SPI	SPI Function Pin
CAMERA	Camera Function Pin
I2C	Wire Function Pin
I2S	I2S Function Pin
DAC	DAC Function Pin
STRAP	Strapping Functions Pin. Note the power-on status.
FLASH	Pins are used in flash and do not connect to external circuits